USB & UART Interface for ESP32 (Programming & Power Supply)

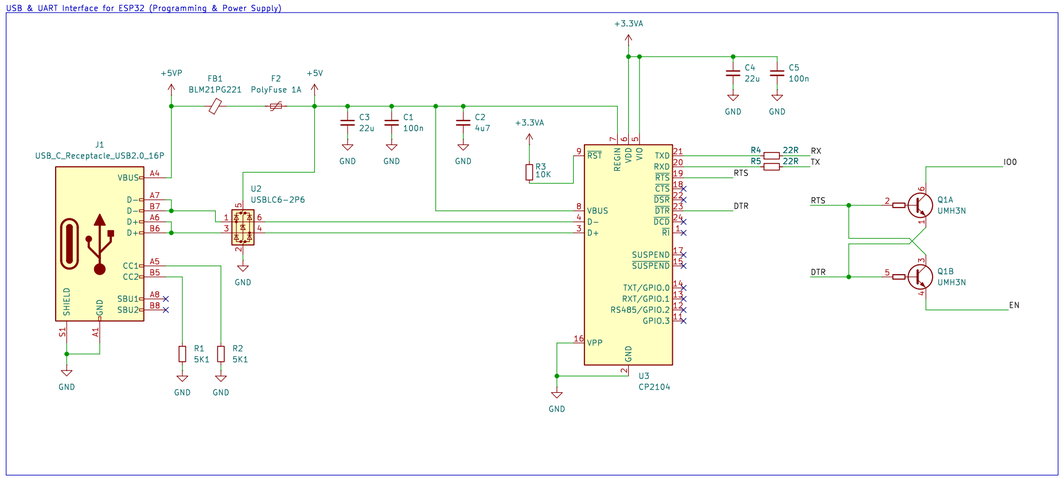

Sensors Input & Sensors Voltage Supply (GND in this case is not the same as in the ESP32)

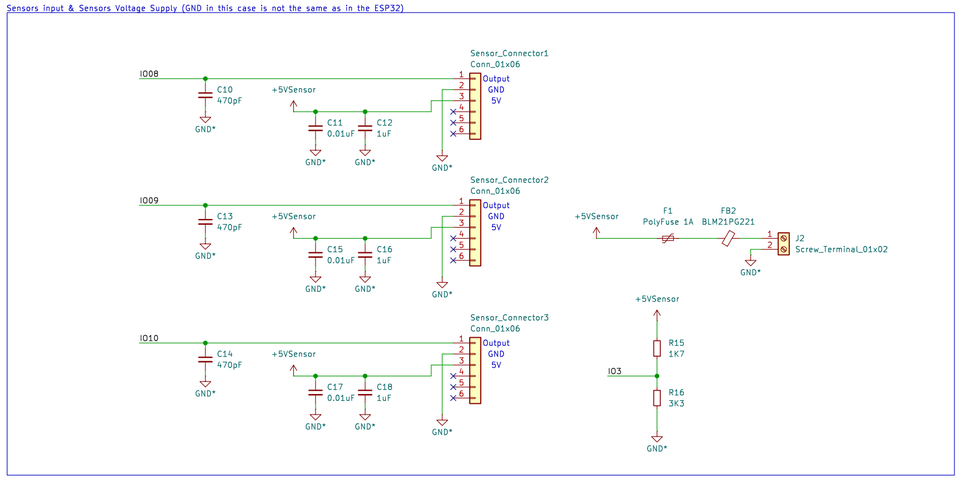

VFD Relays

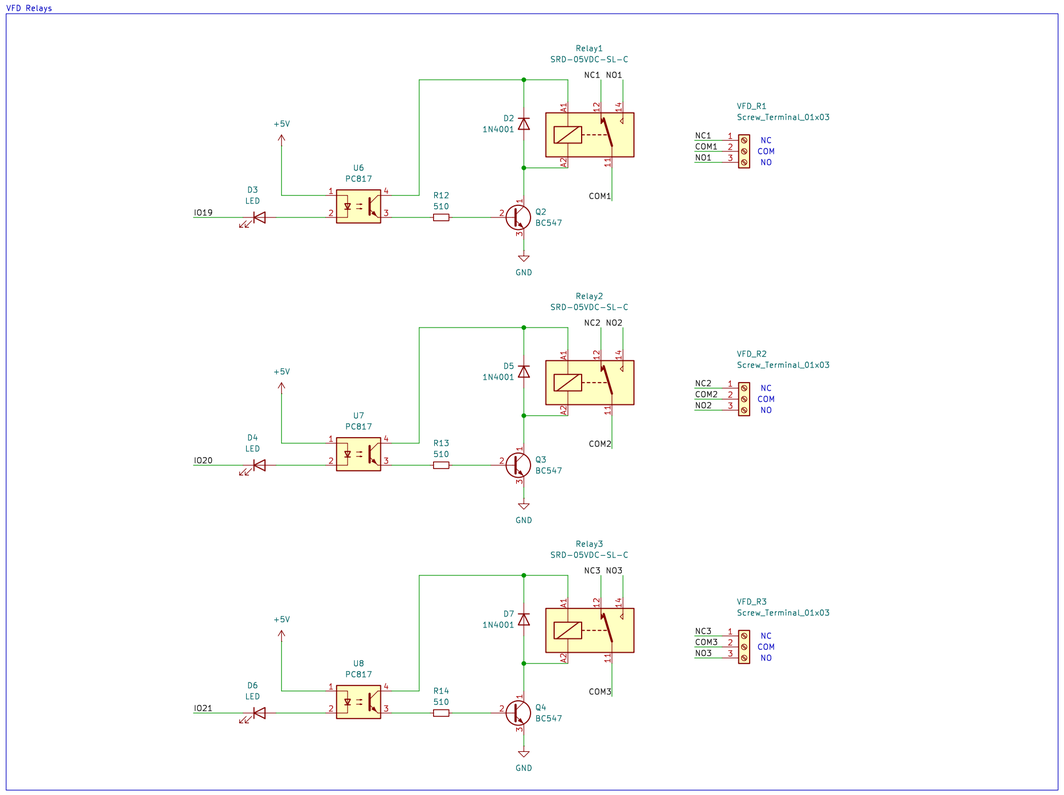

Lowpass Filter VFD

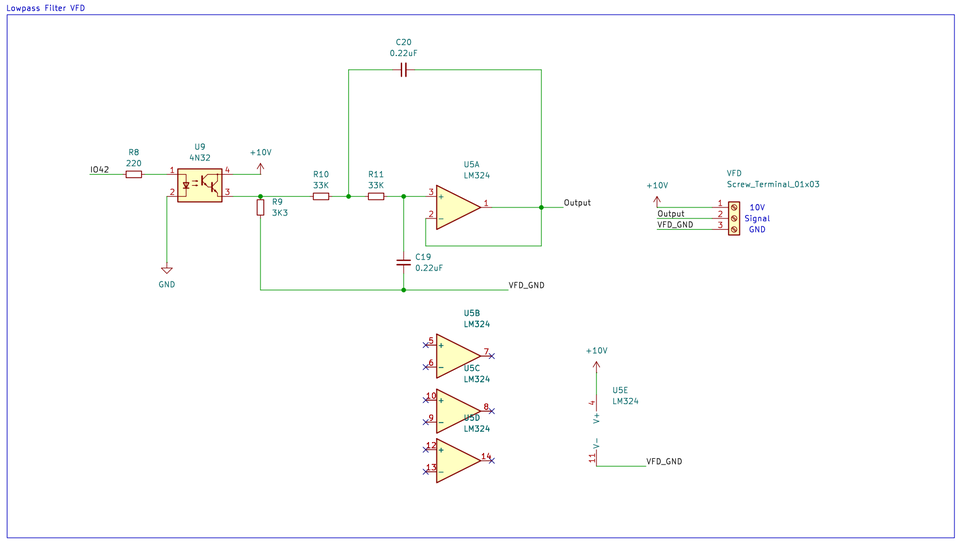

ESP 32 Board

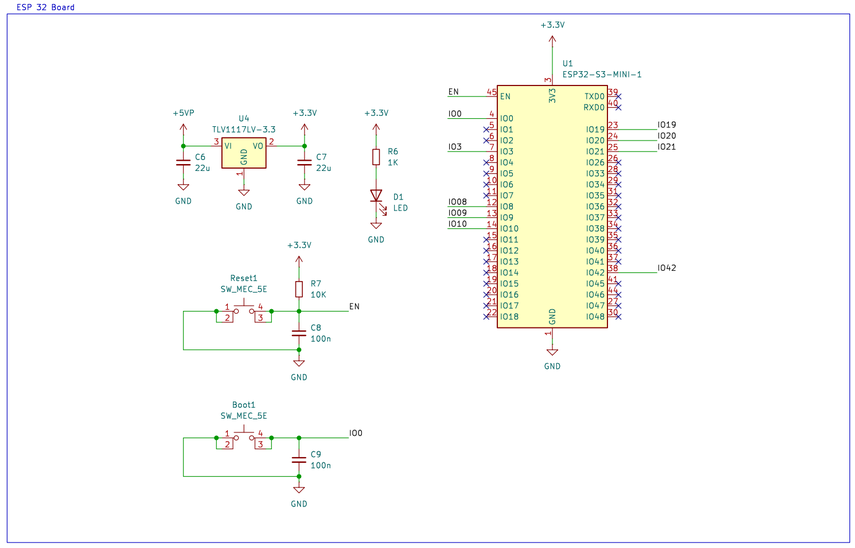

EUPLA

Sheet: /

File: PCB-Placa Proyecto HUEFAES.kicad_sch

Title: PCB – Placa Proyecto HUEFAES

Size: A2	Date: 2024-05-30	**Rev: 1.0**
KiCad E.D.A. 8.0.2		Id: 1/1